DIFANNI

PREMIUM BATHROOM FURNITURE

COUNTER BASIN SERIES

2593-40

Round ceramic countertop basin with a slim circular rim, gently rounded base and central waste opening.



TECHNICAL FEATURES

- Overall dimensions: **410 × 410 × 120 mm**
- Basin type: **Countertop basin**
- Shape: **Round**
- Faucet hole: **None**
- Overflow: **No visible overflow opening**
- Drain position: **Centred**
- Material: **Ceramic**
- Standard finish: **Glossy white**

CERTIFICATIONS

CE certified

MATERIAL CHARACTERISTICS

CERAMIC

Glazed ceramic with a smooth surface. The glossy finish highlights the basin’s circular profile.

FORM & FUNCTION

A slim rim frames the round bowl, which slopes towards a central waste opening. Pair the basin with a wall-mounted or countertop-mounted tap.

STANDARD FINISH

Glossy white ceramic as standard. Contact DIFANNI for availability of the ceramic finishes shown.

INDICATIONS FOR CLEANING

Clean with a soft microfiber cloth and soapy water, then dry with a soft cloth. Avoid abrasive sponges and harsh cleaners.

ACCESSORIES & OEM / ODM

Contact DIFANNI for tap and waste compatibility, accessory supply, and OEM / ODM options for project orders.

TECHNICAL DRAWING

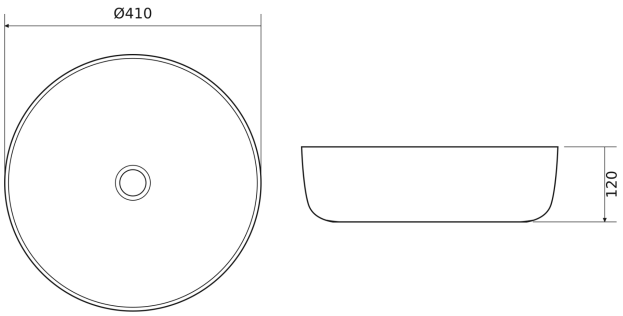

All dimensions in millimetres (mm). Drawing not to scale for print.

