DIFANNI

PREMIUM BATHROOM FURNITURE

COUNTER BASIN SERIES

2670

15.7-inch compact soft-square ceramic vessel basin with an integrated raised rear faucet deck, a slim continuous rim and a gently tapered body. Designed for countertop installation with a sculpted curved deck edge, a calm sloping bowl and centred waste.



TECHNICAL FEATURES

- Overall dimensions: **400 x 400 x 120 mm**
- Basin type: **Countertop vessel basin**
- Nominal size: **15.7 inch**
- Overflow compatibility: **No**
- Faucet hole: **Yes - single hole**
- Drain position: **Centred**
- Drain cover: **Colour-matched ceramic available**
- Material: **Ceramic**
- Standard finish: **Glossy white**

CERTIFICATIONS

CE certified. Production managed by a quality control system in line with ISO 9001:2015 principles. For additional approvals and project documentation, contact the DIFANNI specification team.

TECHNICAL DRAWING

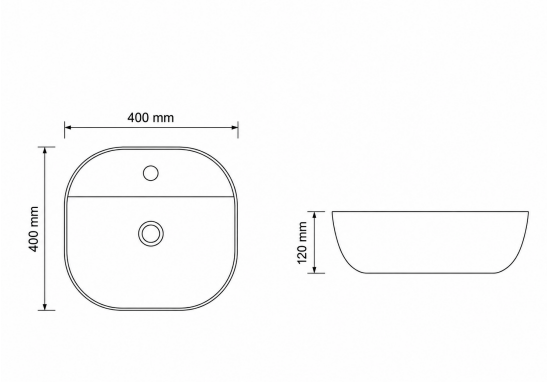

All dimensions in millimetres (mm). Drawing not to scale for print.

MATERIAL CHARACTERISTICS

CERAMIC BODY

Produced in-house in Chaozhou; kiln-fired and individually inspected. The glazed ceramic surface is smooth, durable and low-maintenance for everyday bathroom use.

FORM & FUNCTION

Compact soft-square vessel basin with a raised rear faucet platform integrated into the ceramic body. The platform projects forward in a gentle arc and blends into the side walls. The main bowl uses continuous curved surfaces around a centred waste, while the outer body tapers subtly toward a stable base.

STANDARD FINISH

Glossy white ceramic as standard. Custom ceramic colours are available on request, subject to MOQ and production feasibility.



INDICATIONS FOR CLEANING

Clean only with a soft microfibre cloth and soapy water, then dry with a dry cloth. Do not use abrasive sponges, solvents or strong alkaline cleaners, as these may damage the glazed surface.

ACCESSORIES & OEM / ODM

Tap and waste set sold separately. DIFANNI welcomes OEM / ODM partnerships for distributors, hotel groups and design practices, with customisation of ceramic colour, branding and packaging for project-scale orders. Contact our specification team for samples, drawings (PDF / DWG) and pricing.