DIFANNI

PREMIUM BATHROOM FURNITURE

COUNTER BASIN

FC2305

Oval counter basin in high-fired white ceramic, featuring a gracefully curved flared rim that widens outward from a compact rectangular base — creating a sculptural silhouette with strong visual presence. The organic oval interior complements both freestanding and wall-mounted vanity configurations. • 560 × 370mm • No overflow • Drain sold separately • Ceramic colour customization available



TECHNICAL FEATURES

- Basin width: **560 mm**
- Basin depth: **370 mm**
- Overall height: **170 mm**
- Internal basin depth: **approx. 120 mm**
- Waste hole diameter: **45 mm dia.**
- Overflow compatibility: **No**
- Material: **High-fired ceramic**
- Finish: **Glossy white (standard)**

CERTIFICATIONS

CE certified. Production managed by a quality control system in line with ISO 9001:2015 principles. For additional approvals, contact the DIFANNI specification team.

MATERIAL CHARACTERISTICS

CERAMIC BODY

Produced in-house in Chaozhou; kiln-fired at high temperature and individually inspected. The curved flared rim demands precise mould geometry to achieve consistent wall thickness and smooth surface continuity across every piece.

GLOSSY WHITE FINISH

High-gloss vitreous glaze that accentuates the flowing curves of the form, reflecting light across the flared rim to emphasise the basin's sculptural quality. Resistant to staining and easy to clean.

INDICATIONS FOR CLEANING

Clean only with a soft microfibre cloth and soapy water, then dry with a dry cloth. Do not use abrasive sponges, solvents or acid-based cleaners, as these may damage the glaze surface.

ACCESSORIES & OEM / ODM

Drain sold separately. DIFANNI welcomes OEM / ODM partnerships for distributors, hotel groups and design practices, with customisation of glaze colour and surface finish available on request, subject to MOQ. Contact our specification team for samples, drawings (PDF / DWG) and pricing.

TECHNICAL DRAWING

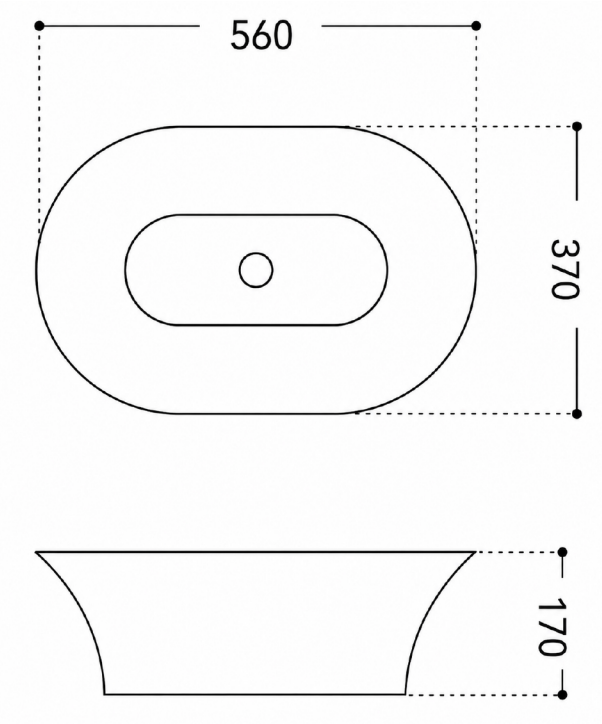

All dimensions in millimetres (mm). Drawing not to scale for print.

