DIFANNI

PREMIUM BATHROOM FURNITURE

CONSOLE SERIES

FCD007

Open-frame freestanding console washbasin with round ceramic top, integrated round basin, and matching open round ceramic shelf on a powder-coated steel frame. • HIGH 845mm X WIDE 500mm • Single tap hole, 45mm dia. • Drain and tap sold separately • Ceramic basin colour customization available.



TECHNICAL FEATURES

- Total height: **845 mm**
- Top diameter: **500 mm dia.**
- Basin diameter (internal): **380 mm dia.**
- Basin depth: **180 mm**
- Tap hole diameter: **45 mm dia.**
- Lower shelf diameter: **460 mm dia.**
- Overflow compatibility: **No**
- Frame material: **Powder-coated steel**
- Top & shelf material: **High-fired ceramic**

CERTIFICATIONS

CE certified. Production managed by a quality control system in line with ISO 9001:2015 principles. For additional approvals, contact the DIFANNI specification team.

TECHNICAL DRAWING

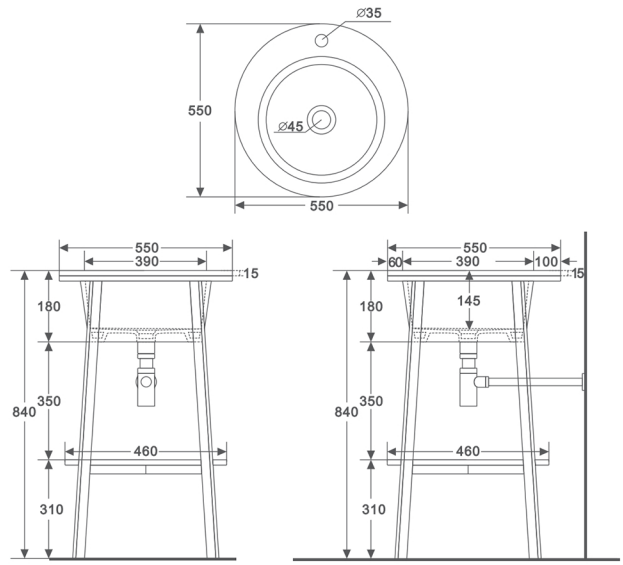

MATERIAL CHARACTERISTICS

CERAMIC TOP & SHELF

Produced in-house in Chaozhou; kiln-fired at high temperature and individually inspected, giving a dense matte surface resistant to staining and everyday wear.

POWDER-COATED STEEL FRAME

High-grade steel, hand-welded, finished with a three-stage matte powder coating for strong resistance to chipping, fading and corrosion.

STANDARD FINISH

Matte black frame with warm white ceramic top and shelf (as shown). Custom colours available on request, subject to MOQ.

INDICATIONS FOR CLEANING

Clean only with a soft microfibre cloth and soapy water, then dry with a dry cloth. Do not use detergents, solvents, alcohol or abrasive sponges, as these may damage ceramic and powder-coated surfaces.

ACCESSORIES & OEM / ODM

Tap and drain sold separately. DIFANNI welcomes OEM / ODM partnerships for distributors, hotel groups and design practices, with customisation of frame finish, ceramic tone and packaging for project-scale orders. Contact our specification team for samples, drawings (PDF / DWG) and pricing.

colour:

