DIFANNI

PREMIUM BATHROOM FURNITURE

CONSOLE SERIES

FCD009

Open-frame freestanding console washbasin with a circular ceramic top, concentric raised round basin and matching circular lower shelf on a black metal frame. Top diameter 600 mm. Single tap hole, 35 mm dia. Tap and drain fittings specified separately.



TECHNICAL FEATURES

- Top diameter: **600 mm**
- Basin zone diameter: **400 mm (drawing)**
- Annular deck width: **100 mm**
- Raised rim above deck: **60 mm**
- Ceramic deck thickness: **20 mm**
- Tap hole diameter: **35 mm**
- Lower ceramic shelf diameter: **500 mm**
- Overall rim height: **approx. 860 mm***
- Frame finish: **Black**
- Top and shelf: **Ceramic**

CERTIFICATIONS

CE certified. For applicable certifications, test reports and project-specific compliance documents, contact the DIFANNI specification team.

MATERIAL CHARACTERISTICS

CERAMIC TOP & SHELF

Circular ceramic surfaces with softly rounded edges. The basin and surrounding deck share a common centre, with a large white ceramic waste cover shown in the product reference.

OPEN METAL FRAME

Slender black legs and open supports create a light, freestanding structure. The lower circular ceramic shelf provides accessible storage.

STANDARD FINISH

Glossy white ceramic top and shelf with black frame, as shown. Other ceramic colours are illustrated at right; availability and order requirements to be confirmed.

INDICATIONS FOR CLEANING

Clean with a soft microfibre cloth and mild soapy water, then dry with a clean cloth. Avoid abrasive pads, harsh chemicals and solvents on ceramic and coated metal surfaces.

ACCESSORIES & OEM / ODM

Confirm tap, drain, finish and accessory requirements when ordering. Contact DIFANNI for OEM / ODM enquiries, samples, project specifications, installation information and pricing.

TECHNICAL DRAWING

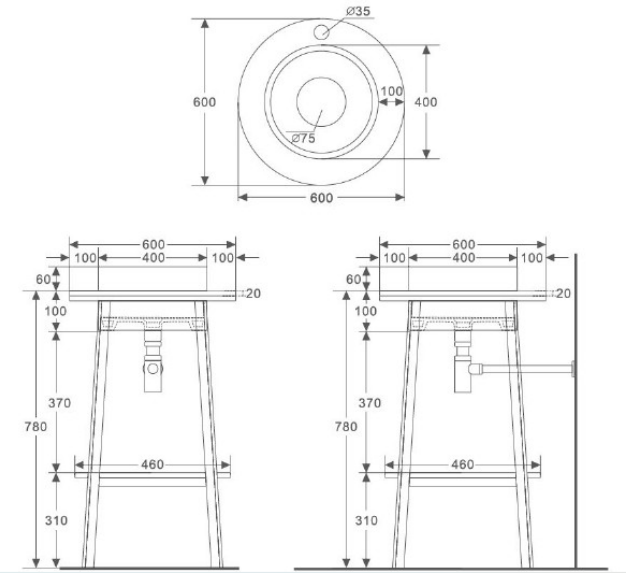

All dimensions in millimetres (mm). Drawing not to scale.

CERAMIC COLOUR OPTIONS

